BL-519
www.BoardFree.kr

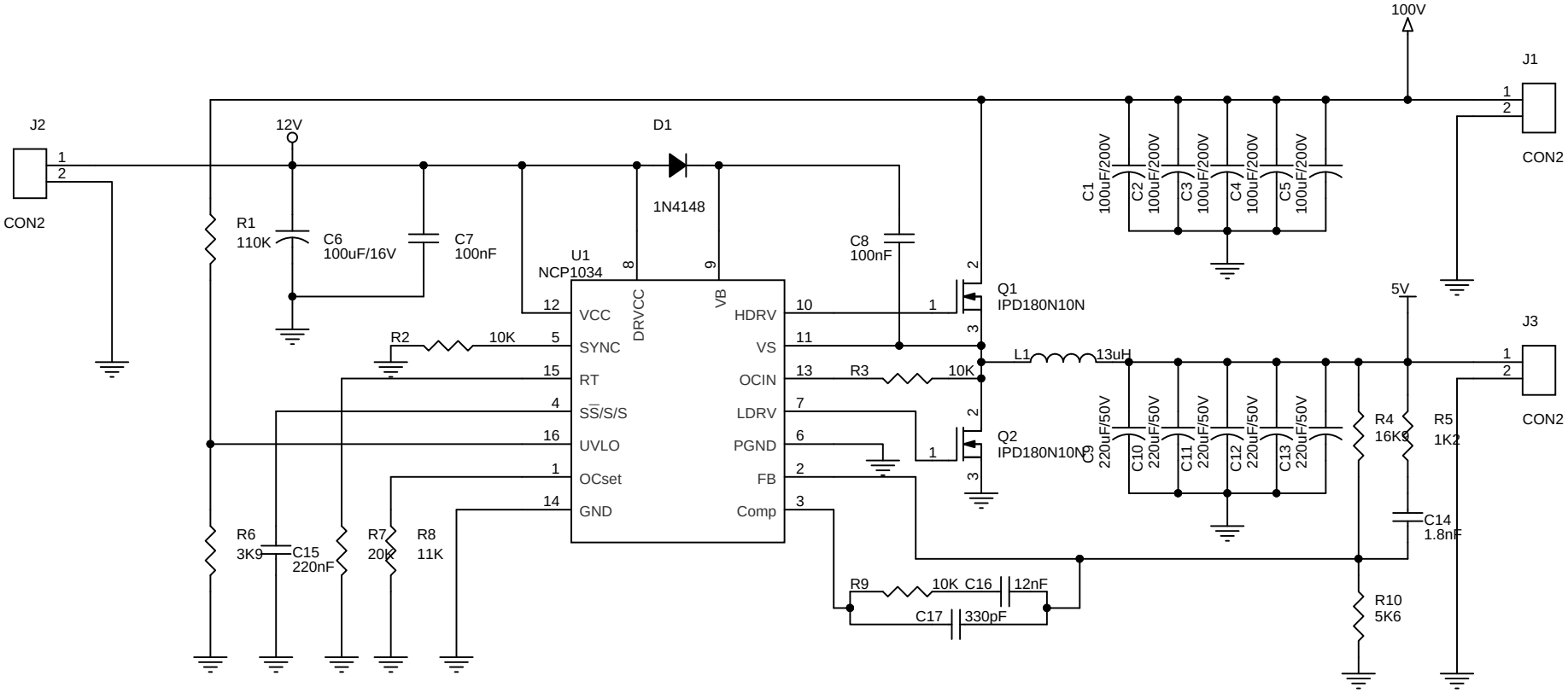

Title <Title>		
Size A4	Document Number <Doc>	Rev <RevCo
Date: Monday, May 14, 2018	Sheet 1 of 1	